POWERED WHEEL BARROW



Bäumr-AG®

User Manual

[Revision 9.0]

READ THIS MANUAL CAREFULLY BEFORE USE – FAILURE TO DO SO MAY RESULT IN INJURY, PROPERTY DAMAGE AND MAY VOID WARRANTY. • KEEP THIS MANUAL FOR FUTURE REFERENCE. • Products covered by this manual may vary in appearance, assembly, inclusions, specifications, description, and packaging.

The product is NOT supplied with engine oil, although traces of oil from the manufacturing process may be present. It is essential to add adequate engine oil of the correct type to the engine before use. **Failure to add engine oil will void the product warranty**.

Safety

Safety messages are designed to alert you to possible dangers or hazards that could cause death, injury or equipment or property damage if not understood or followed. Safety messages have the following symbols:



You WILL be KILLED or SERIOUSLY INJURED if you do not follow instructions.



You CAN be KILLED or SERIOUSLY INJURED if you do not follow instructions.



You CAN be INJURED if you do not follow instructions or equipment damage may occur.

It is vital that you read and understand this user manual before using the product, including safety warnings, and any assembly and operating instructions. Keep the manual for future reference.

Safety precautions and recommendations detailed here must be fully understood and followed to reduce the risk of injury, fire, explosion, electrical hazard, and/or property damage.

Safety information presented here is generic in nature – some advice may not be applicable to every product. The term "equipment" refers to the product, be it electrical mains powered, battery powered or combustion engine powered.

- **Before Use** - If you are not familiar with the safe operation/handling of the equipment or are in any way unsure of any aspect of suitability or correct use for your application, you should complete training conducted by a person or organization qualified in safe use and operation of this equipment, including fuel/electrical handling and safety.
- Do NOT operate the equipment in flammable or explosive environments, such as in the presence of flammable liquids, gases or dust. The equipment may create sparks or heat that may ignite flammable substances.
- Keep clear of moving parts.
- Equipment may be a potential source of electric shock or injury if misused.
- Do NOT operate the equipment if it is damaged, malfunctioning or is in an excessively worn state.
- Do NOT allow others to use the equipment unless they have read this manual and are adequately trained.
- Keep packaging away from children - risk of suffocation! Operators must use the equipment correctly. When using the equipment, consider conditions and pay due care to persons and property.

General Work Area Safety

- Work areas should be clean and well it.
- Do not operate the equipment if bystanders, animals etc are within operating range of the equipment or the general work area.
- If devices are provided for connecting dust extraction / collection facilities, ensure these are connected and used properly. Dust collection can reduce dust-related hazards.

General Personal Safety

- Wear appropriate protective equipment when operating, servicing, or when in the operating area of the equipment to help protect from eye and ear injury, poisoning, burns, cutting and crush injuries. Protective equipment such as safety goggles, respirators, non-slip safety footwear, hard hat, hearing protection etc should be used for appropriate equipment / conditions. Other people nearby should also wear appropriate personal protective equipment. Do not wear loose clothing or jewellery, which can be caught in moving parts. Keep hair and clothing away from the equipment.
- Stay alert and use common sense when operating the equipment. Do not over-reach. Always maintain secure footing and balance.
- Do not use the equipment if tired or under the influence of drugs, alcohol or medication.
- This equipment is not intended for use by persons with reduced physical, sensory or mental capabilities.

General Fuel Safety

- Petrol/fuel/gasoline is extremely flammable – keep clear of naked flames or other ignition sources.
- Do not spill fuel. If you spill fuel, wipe it off the equipment immediately – if fuel gets on your clothing, change clothing.
- Do NOT smoke near fuel or when refuelling.
- Always shut off the engine before refuelling.
- Do NOT refuel a hot engine.
- Open the fuel cap carefully to allow any pressure build-up in the tank to release slowly.
- Always refuel in well ventilated areas.
- Always check for fuel leakage. If fuel leakage is found, do not start or run the engine until all leaks are fixed.

General Carbon-Monoxide Safety

- Using a combustion engine indoors **CAN KILL IN MINUTES**. Engine exhaust contains carbon-monoxide – a poison you cannot smell or see.
- Use combustion engines OUTSIDE only, and far away from windows, doors and vents.

General Equipment Use and Care

- Keep packaging away from children and pets, potential risk of suffocation or choking.
- The equipment is designed for domestic use only.
- Handle the equipment safely and carefully.
- Before use, inspect the equipment for misalignment or binding of moving parts, loose components, damage or any other condition that may affect its operation. If damaged, have the equipment repaired by an authorised service centre or technician before use.
- Prevent unintentional starting of the equipment - ensure equipment and power switches are in the OFF position before connecting or moving equipment. Do not carry equipment with hands or fingers touching any controls. Remove any tools or other items that are not a part of the equipment from it before starting or switching on.
- Do not force the equipment. Use the correct equipment for your application. Equipment will perform better and be safer when used within its design and usage parameters.
- Use the equipment and accessories etc. in accordance with these instructions, considering working conditions and the work to be performed. Using the equipment for operations different from those intended could result in hazardous situations.
- Always keep equipment components (engines, hoses, handles, controls, frames, housings, guards etc) and accessories (cutting tools, nozzles, bits etc) properly maintained. Keep the equipment clean and, where applicable, properly lubricated.
- Store the equipment out of reach of children or untrained persons. To avoid burns or fire hazards, let the equipment cool completely before transporting or storing. Never place or store the equipment near flammable materials, combustible gases or liquids etc.
- The equipment is not weather-proof, and should not be stored in direct sunlight, at high ambient temperatures or locations that are damp or humid.
- Do not clean equipment with solvents, flammable liquids or harsh abrasives.
- For specific equipment safety use and care, see Equipment Safety.

© Baumr-AG

General Electrical Safety

- Inspect electrical equipment, extension cords, power bars, and electrical fittings for damage or wear before each use. Repair or replace damaged equipment immediately.
- Ensure all power sources conform to equipment voltage requirements and are disconnected before connecting or disconnecting equipment.
- When wiring electrically powered equipment, follow all electrical and safety codes.
- Always use a Residual Current Device (RCD) (GFCI) / Earth Leakage Circuit Breaker / Safety Switch when operating this item (electrical items only).
- High voltage / high current power lines may be present. Use extreme caution to avoid contact or interference with power lines. Electrical shock can be fatal.

General Electrical Safety

- Electrically grounded equipment must have an approved cord and plug and be connected to a grounded electrical outlet.
- Do NOT bypass the ON/OFF switch and operate equipment by connecting and disconnecting the electrical cord.
- Do NOT use equipment that has exposed wiring, damaged switches, covers or guards.
- Do NOT use electrical equipment in wet conditions or in damp locations.
- Do NOT use electrical cords to lift, move or carry equipment.
- Do NOT coil or knot electrical cords, and ensure electrical cords are not trip hazards.

General Service Information

- The equipment must be serviced or repaired at authorised service centres by qualified personnel only.
- Replacement parts must be original equipment manufacturer (OEM) to ensure equipment safety is maintained.
- Do NOT attempt any maintenance or repair work not described in this manual.
- After use, the equipment and components may still be hot – allow the equipment to cool and disconnect spark plugs and/or electrical power sources and/or batteries from it before adjusting, changing accessories or performing repair or maintenance.
- Do NOT adjust while the equipment is running.
- Perform service related activities in suitable conditions, such as a workshop.
- Replace worn, damaged or missing warning/safety labels immediately.

Understand your Powered Wheel Barrow

- Read and understand the operator's manual and labels affixed to the machine. Learn its application and limitations as well as the specific potential hazards peculiar to it.
- Be thoroughly familiar with the controls and their proper operation. Know how to stop the machine and disengage the controls quickly.
- Make sure to read and understand all the instructions and safety precautions as outlined in the Engine Manufacturer's Manual, packed separately with your unit. Do not attempt to operate the machine until you fully understand how to properly operate and maintain the Engine and how to avoid accidental injuries and/or property damage.

Work area

- Never start or run the machine inside a closed area. The exhaust fumes are dangerous, containing carbon monoxide, an odourless and deadly gas. Operate this unit only in a well-ventilated outdoor area.
- Never operate the machine without good visibility or light.

Personal safety

- Do not operate the machine while under the influence of drugs, alcohol, or any medication that could affect your ability to use it properly.
- Dress properly. Wear heavy long pants, boots and gloves. Do not wear loose clothing, short pants, and jewellery of any kind. Secure long hair so it is above shoulder level. Keep your hair, clothing and gloves away from moving parts. Loose clothes, jewellery or long hair can be caught in moving parts.
- Use safety equipment. Always wear eye protection. Safety equipment such as a dust mask, hard hat, or hearing protection used for appropriate conditions will reduce personal injuries.
- Check your machine before starting it. Keep guards in place and in working order. Make sure all nuts, bolts, etc. are securely tightened.
- Never operate the machine when it needs repair or is in poor mechanical condition. Replace damaged, missing or failed parts before using it. Check for fuel leaks. Keep the machine in safe working condition.
- Never remove or tamper with safety device. Check their proper operation regularly.
- Do not use the machine if the engine's switch does not turn it on or off. Any gasoline powered machine that cannot be controlled with the engine switch is dangerous and must be replaced.
- Form a habit of checking to see that keys and adjusting wrenches are removed from machine area before starting it. A wrench or a key that is left attached to a rotating part of the machine may result in personal injury.
- Stay alert, watch what you are doing and use common sense when operating the machine.
- Do not overreach. Do not operate the machine while barefoot or when wearing sandals or similar lightweight footwear. Wear protective footwear that will protect your feet and improve your footing on slippery surfaces. Keep proper footing and balance at all times. This enables better control of the machine in unexpected situations.
- Avoid accidental starting. Be sure the engine is off before transporting the machine or performing any maintenance or service on the unit. Transporting or performing maintenance or service on a machine with engine on invites accidents.

Fuel safety

- Fuel is highly flammable, and its vapours can explode if ignited. Take precautions when using to reduce the chance of serious personal injury.
- When refilling or draining the fuel tank, use an approved fuel storage container while in a clean, well-ventilated outdoor. Do not smoke, or allow sparks, open flames or other sources of ignition near the area while adding fuel or operating the unit. Never fill fuel tank indoors.
- Keep grounded conductive objects, such as tools, away from exposed, live electrical parts and connections to avoid sparking or arcing. These events could ignite fumes or vapours.
- Always stop the engine and allow it to cool before filling the fuel tank. Never remove the cap of the fuel tank or add fuel while the engine is running or when the engine is hot. Do not operate the machine with known leaks in the fuel system.

- Loose the fuel tank cap slowly to relieve any pressure in the tank.
- Never over fill fuel tank. Fill tank to no more than 12.5mm (1/2”) below the bottom of the filler neck to provide space for expansion as the heat of the engine can cause fuel to expand.
- Replace all fuel tank and container caps securely and wipe up spilled fuel. Never operate the unit without the fuel cap securely in place.
- Avoid creating a source of ignition for spilled fuel. If fuel is spilled, do not attempt to start the engine but move the machine away from the area of spillage and avoid creating any source of ignition until fuel vapours have dissipated.
- Store fuel in containers specifically designed and approved for this purpose.
- Store fuel in a cool, well-ventilated area, safely away from sparks, open flames or other sources of ignition.
- Never store fuel or machine with fuel in the tank inside a building where fumes may reach a spark, open flame, or other sources of ignition, such as a water heater, furnace, clothes dryer and the like. Allow the engine to cool before storing in any enclosure.

Machine use and care

- Position the machine in such a way that it cannot move during maintenance, cleaning, adjustment, assembly of accessories or spare parts, as well as under storage.
- Do not force the machine. Use the correct machine for your application. The correct machine will do the job better and safer at the rate for which it was designed.
- Do not change the engine governor settings or over-speed the engine. The governor controls the maximum safe operating speed of the engine.
- Do not run the engine at a high speed when you are not working.
- Do not put hands or feet near rotating parts.
- Avoid contact with hot fuel, oil, exhaust fumes and hot surfaces. Do not touch the engine or muffler. These parts get extremely hot from operation. They remain hot for a short time after you turn off the unit. Allow the engine to cool before doing maintenance or making adjustments.
- If the machine should start to make an unusual noise or vibration, immediately shut off the engine, disconnect the spark plug wire, and check for the cause. Unusual noise or vibration is generally warning of trouble.
- Use only attachments and accessories approved by the manufacturer. Failure to do so can result in personal injury.
- Maintain the machine. Check for misalignment or binding of moving parts, breakage of parts and any other condition that may affect the machine’s operation. If damaged, have the machine repaired before use. Many accidents are caused by poorly maintained equipment.
- Keep the engine and muffler free of grass, leaves, excessive grease or carbon build up to reduce the chance of a fire hazard.
- Never douse or squirt the unit with water or any other liquid. Keep handles dry, clean and free from debris. Clean after each use.
- Observe proper disposal laws and regulations for gas, oil, etc. to protect the environment.
- Store idle machine out of the reach of children and do not allow persons unfamiliar with the machine or these instructions to operate it. Machine is dangerous in the hands of untrained users.

Service

- Before cleaning, repair, inspecting, or adjusting, shut off the engine and make certain all moving parts have stopped. Disconnect the spark plug wire and keep the wire away from the plug to prevent accidental starting.
- Have your machine serviced by qualified repair personnel using only identical replacement parts. This will ensure that the safety of the machine maintained.

Specific Safety Rules

- Thoroughly inspect the area to be worked, keep the working area clean and free of debris to prevent tripping. Operate on a flat level ground.
- Never place any part of your body where it would be in danger if movement should occur during assembly, installation, and operation, maintenance, repairing or moving.
- Keep all bystanders, children, and pets at least 23m (75 feet) away. If you are approached, stop the unit immediately.
- Do not mount on dump box and never carry passengers.
- Never park the machine in a place with unstable ground which could give way, particularly when it is full.
- Disengage clutch lever before starting the engine.
- Start the engine carefully according to instructions and with feet well away from the moving parts.
- Never leave the operating position when the engine is running.
- Always hold the unit with both hands when operating. Keep a firm grip on the handlebars. Be aware that the machine may unexpectedly bounce upward or jump forward if the machine should strike buried obstacles such as large stones.
- Walk, never run with the machine.
- Do not overload the machine capacity. Drive at a safe speed, adjusting the speed to the slope of the land, the surface conditions of the road, and the weight of the load.
- Use extreme caution when in reverse or pulling the machine towards you.
- Exercise extreme caution when operating on or crossing gravel drives, walks, or roads. Stay alert for hidden hazards or traffic.
- On soft ground, drive at the first forward/reverse gear. Do not rapidly accelerate, turn sharply or stop.
- Pay the utmost attention when working on frozen ground as the machine may tend to skid.
- If possible, avoid driving on pebbly river bed, crushed stone terrains, steel concrete, stumpy field, logs etc., since such operation causes fatal damage or shortens life span of tracks.
- Do not operate the machine in confined areas where there may be a risk of crushing the operator between the machine and another object.
- Never operate the machine on slopes where angle is over 20°.

- When moving over a slope, whether moving forward or in reverse, always make certain that the weight is evenly balanced. Always move in directions parallel with the slope (up or down). To avoid danger, do not shift gears on slopes.
- When tipping the load from a dumper, the centre of gravity will change continuously, and the ground conditions will be essential for the stability of the machine. There are special hazards for dumpers working on soft ground and when the load is sticking to body e.g. wet clay.

⚠ DANGER ⚠

Using an engine or wood/charcoal/gas fuelled appliance indoors CAN KILL YOU IN MINUTES. Engine exhaust and wood/charcoal/gas fumes contain carbon monoxide. This is a poison you cannot see or smell.

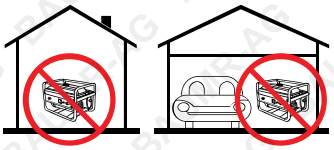

NEVER use inside a building, home, garage, boat, caravan or tent EVEN IF doors and windows are open.

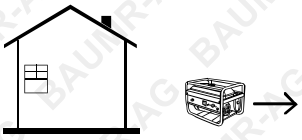

Only use OUTSIDE and far away from windows, doors, and vents.

Avoid other hazards - READ MANUAL BEFORE USE.

GENERAL:
- Do not operate in a hazardous location. Such areas include where there is a risk of explosion of petrol fumes, leaking gas or explosive dusts.
- Do not operate in a confined area where exhaust gases or wood/charcoal/gas fumes could reach dangerous concentrations.

PRODUCTS FEATURING AN ENGINE
- Follow all warnings in the section titled "GENERAL".
- Explosion hazard - never smoke while refuelling.
- Take care not to spill fuel. When refuelling the engine, ensure that the engine has been allowed to cool. Prevent spilling of fuel as this may also ignite with a hot engine.
- Never refuel while engine is running.

GENERATORS
- Follow all warnings in the sections titled "GENERAL" and "PRODUCTS FEATURING AN ENGINE".
- The output of this generator is potentially lethal. The generator should not be connected to a fixed electrical installation except by an appropriately licensed person.
- Not weatherproof – protect your machine. This machine is not weatherproof and should not be exposed to direct sunlight, high ambient temperature, damp conditions, wet conditions or high humidity conditions.

Safety Symbols

The product may have safety warning labels attached to it, explained below. Understand the symbols on your product and their meanings. If any stickers become unreadable, unattached etc., replace them.



Flammable Material Hazard
Flammable liquids, gases or substances etc may present. Avoid ignition sources and open flames. Danger of fire.



Read User Manual
Read and fully understand product safety warnings, operation, procedures etc before using the product.



Use Hand Protection
Wear appropriate hand protection and take due care as the product or use of the product may present hand hazards.



Carbon-Monoxide Hazard
Do not use the product in confined areas or without adequate ventilation. Carbon-monoxide poisoning can be fatal.



Electrocution / Electrical Shock Hazard
High voltage or high current electricity may be present or required by the product. Take due care when handling electrical products, cables, plugs and leads. Electrical shock can be fatal.



Toxic Fumes / Dust Hazard
Using the product or by-products from use may produce fumes, smoke or particles that could be harmful if inhaled. Wear appropriate breathing protection and have adequate ventilation.



Explosive Material Hazard
Combustible liquids, gases or substances etc may be present. Avoid ignition sources and open flames. Danger of explosion.



Cutting / Amputation Hazard
The product may have blades, edges or mechanical devices that can cause severe cut injury to fingers, limbs etc. Take due care when handling and using the product.



Crush Hazard
The product may have blades, edges or mechanical devices that can cause severe crush injury to fingers, limbs etc. Take due care when handling and using the product.



Single Operator Only
The product must be operated by a single person only. More than one person operating the product may introduce additional hazards.



Use Face Protection
Wear appropriate full-face protection and take due care as the product or use of the product may present face and eye hazards.



Use Foot Protection
Wear appropriate foot protection and take due care as the product or use of the product may present foot hazards.



Use Eye / Ear / Head Protection
Wear appropriate eye and / or ear and / or head protection and take due care as the product or use of the product may present eye, hearing and head hazards.



Running Hazard
Do not run on or near the product as doing so may present a fall hazard.



Diving Hazard
Do not dive into the product as doing so may present a neck / head injury hazard.



Adult Supervision Required
Always supervise children and other users of a product to prevent drowning or injury.



Skin Penetration / Puncture Hazard
The product may produce pressure, emit liquids or objects that can cause severe injury to fingers, limbs, blood etc. Take due care when handling and using the product.



Hot Surface Hazard
Be aware that the product may produce high temperatures and hot surfaces that can cause burn injuries.



Flying Debris Hazard
Be aware that the product or use of the product may present hazards produced by flying debris. Wear appropriate clothing and protective devices.



Moving Parts Hazard
Be aware that the product contains or uses mechanical devices that move or rotate. Always wait for moving parts to stop fully before handling the product, adjusting, maintenance etc.

© Baumr-AG

 **Carbon-Monoxide Hazard** Do not use the product in confined areas or without adequate ventilation. Carbon-monoxide poisoning can be fatal.	 **Pull Hazard** Be aware that the product contains or uses mechanical devices that can pull in objects and can cause severe injury to fingers, limbs etc. Take due care when handling and using the product.	 **Slope / Fall Injury Hazard** Be aware that using the product on sloping surfaces or in slippery conditions may present additional dangers from falls and contact with blades, moving parts, hot surfaces etc.	 **"Slam Dunk" Warning** Do NOT attempt "slam dunk" manoeuvres as this may result in severe injury due to falling, product breakage or collapse etc.
 **Electrocution / Electrical Shock Hazard - Outdoor** High voltage or high current electricity may be present or required by the product. Do NOT use in rain, damp or wet conditions. Electrical shock can be fatal.	 **Electrocution / Electrical Shock Hazard - Disconnect** High voltage or high current electricity may be present or required by the product. Always disconnect the product from the electrical supply before handling the product, adjusting, maintenance etc.	 **Power Line Electrocution Hazard** High voltage / high current power lines may be present. Use extreme caution to avoid contact or interference with power lines. Electrical shock can be fatal.	 **"Kick-Back" Hazard** High level of "kick-back" hazard that can cause the machine to suddenly rotate towards operator. Kick-back injury can be fatal.
 **Winch Operator Position Hazard** Do NOT stand between winch and load. Do NOT use winch to move people.	 **Winch Lift Hazard** Do NOT LIFT load vertically. Use machine to PULL only.	 **Cable Hazard** Ensure that load bearing cable is not kinked or knotted.	 **Winch Cable Hazard** Ensure that there is a minimum number of cable coils on winching mechanism.
 **Winch Hook Hazard** Carry hook to load – do NOT throw or run.	 **Flash / Blinding Hazard** Wear appropriate eye protection for welding. Direct exposure to weld arcs may cause permanent eye injury.	 **Laser Hazard** Laser may be in use – do NOT look directly at laser or allow others to.	

© Baumr-AG

Table of Contents

Safety **2**
Safety Symbols 6
Parts Identification **9**
Assembly and Set-Up **10**
Tyre Inflation 11
Know Your Powered Wheel Barrow **12**
Operation **15**
Adding Fuel 15
Starting the Engine 15
Operating the Wheel Barrow 15
Idle Speed 16
Stopping the Engine 16
Maintenance **17**
Preventive Maintenance 17
Adjusting the Clutch 17
Adjusting the Steering 17
Lubrication 17
Tyre Pressure 18
Engine Maintenance 18
Storage **18**
Troubleshooting **20**
Specifications **21**

© Baumr-AG

Parts Identification

The powered wheel barrow comes partially assembled and is shipped in carefully packed package. After all the parts have been removed from the package, you should have:

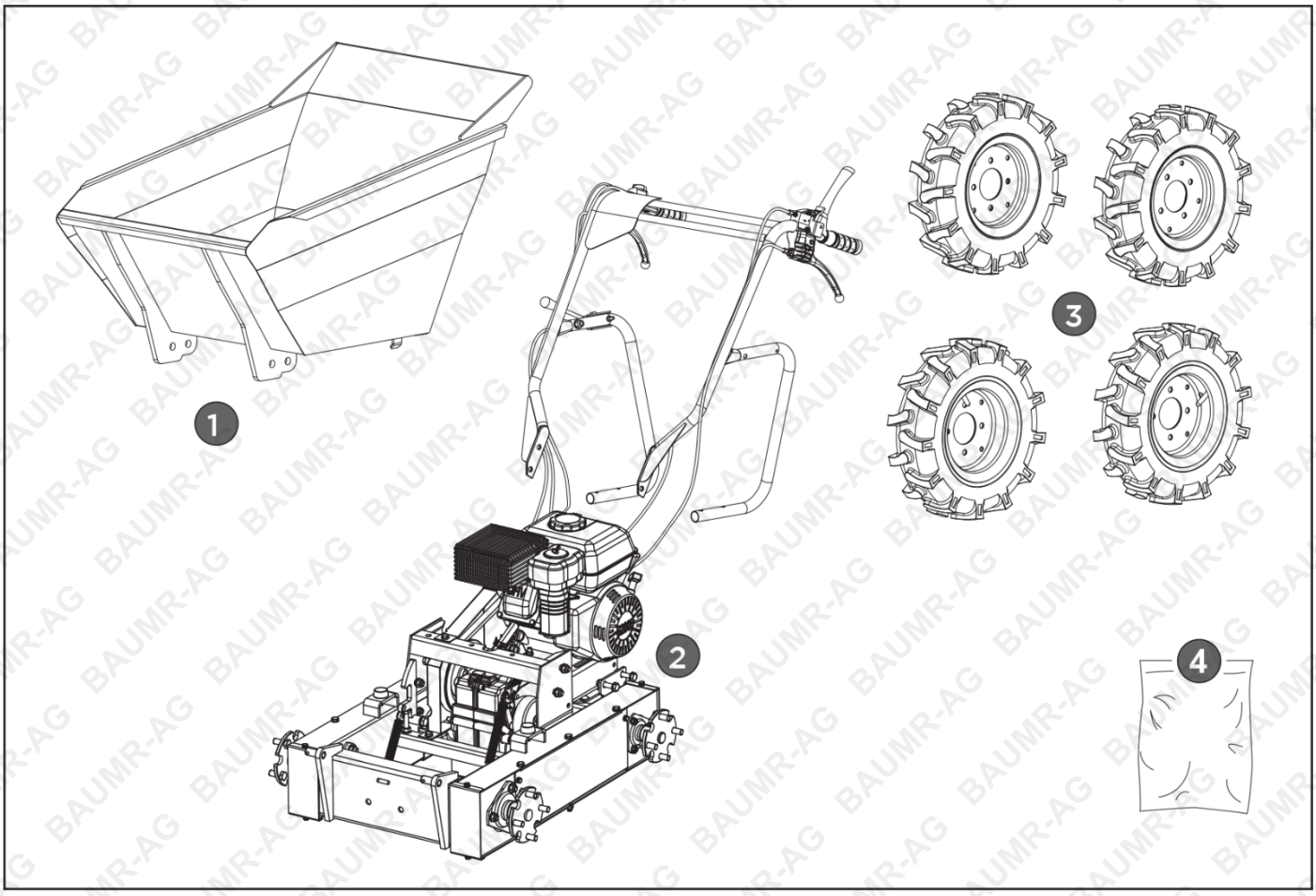

No.	Name
1	Dump Box
2	Main Frame
3	Wheels
4	Hardware Bag, including

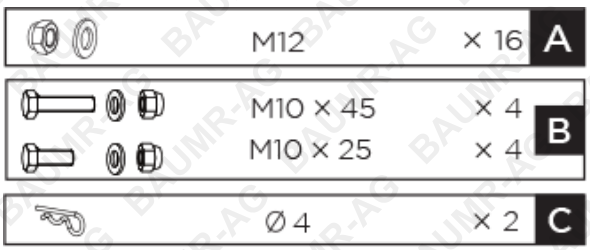

Spare parts available for purchase, scan QR code below:

© Baumr-AG

Assembly and Set-Up

1. Mount the wheels and fasten them with M12 nuts.

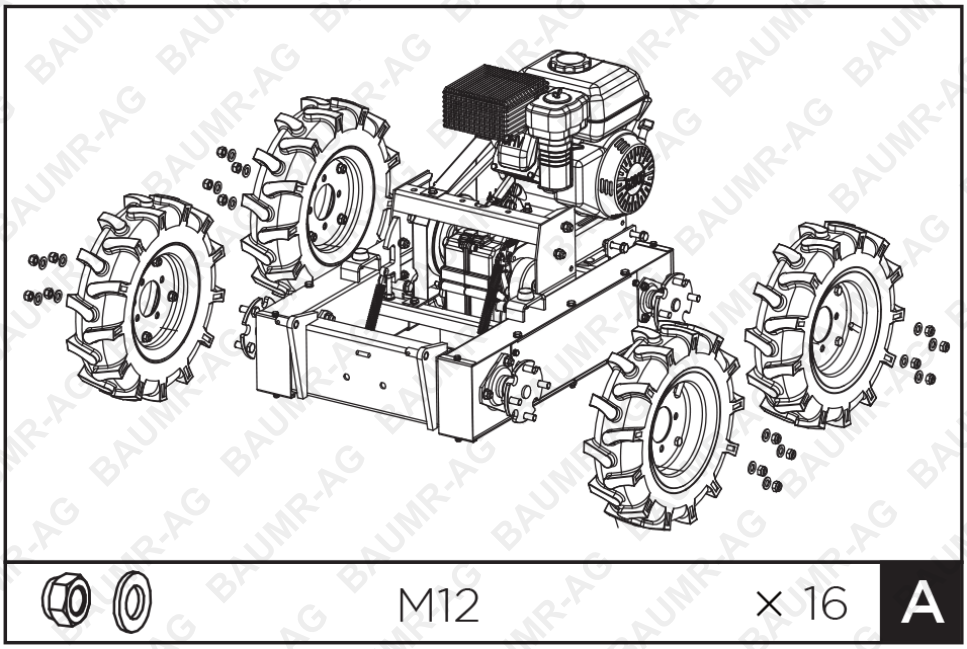



2. Mount the handle frame assembly to the chassis and secure it with M10X25 bolts, washers and nuts at the front and M10X45 bolts, washers and nuts at the rear.

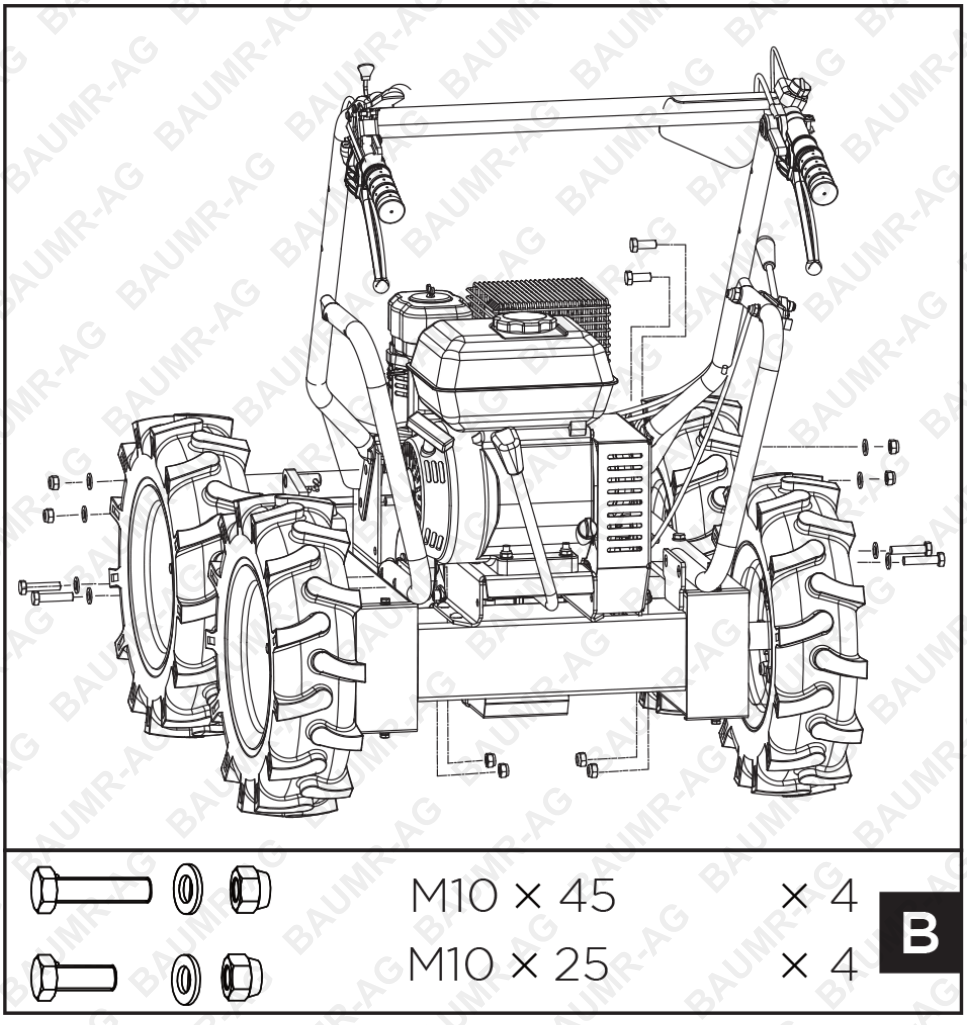

© Baumr-AG

3. Install the dump box and fasten the front with two Ø 4 R-clips.

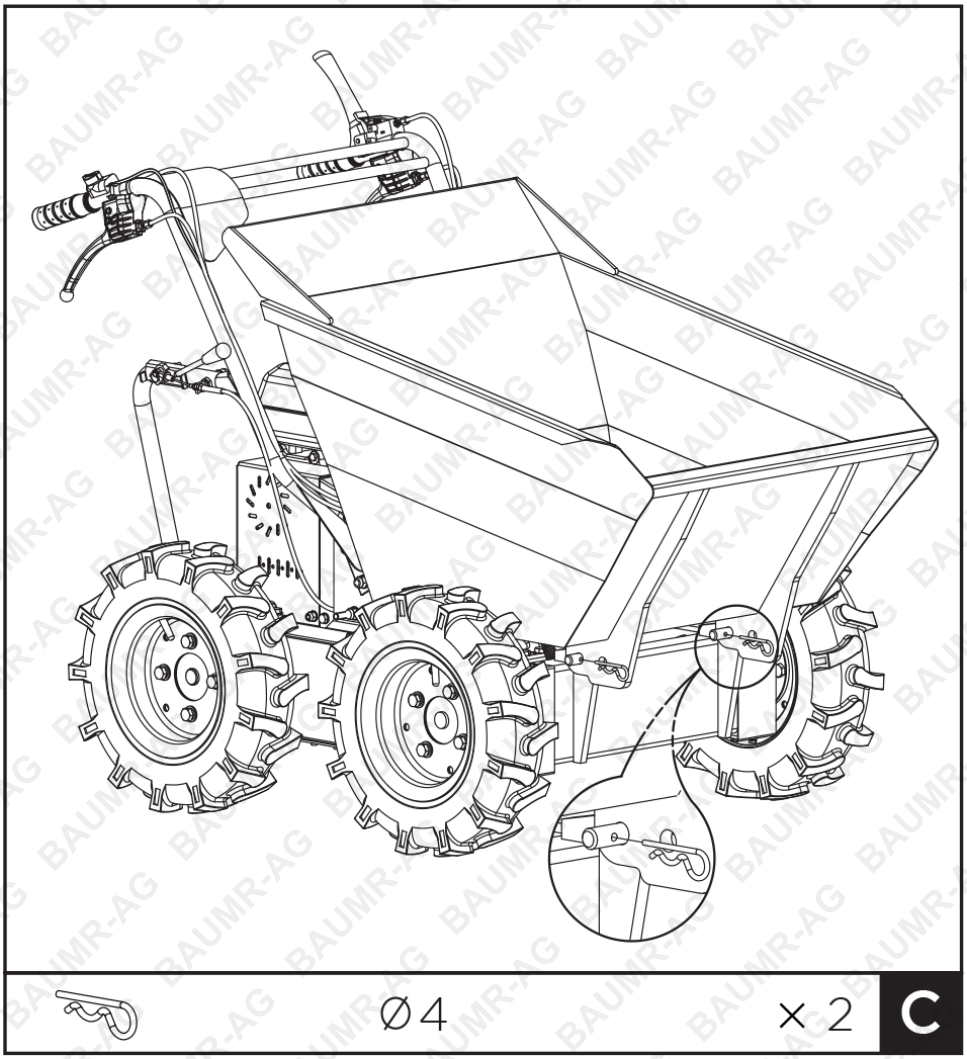

4. Add oil according to Engine Manual packed separately with your unit.

Oil has been drained for shipping. Failure to fill engine sump with oil before starting engine will result in permanent damage and will void engine warranty.

Tyre Inflation

The tyres must be inflated before use. The required PSI or KPA is printed on the tyres side wall as shown in the image to the right. Failure to pump the tyres to the required spec can result in a flat. Tyres and tubes are classed as consumable items and are not generally covered under warranty.



Know Your Powered Wheel Barrow

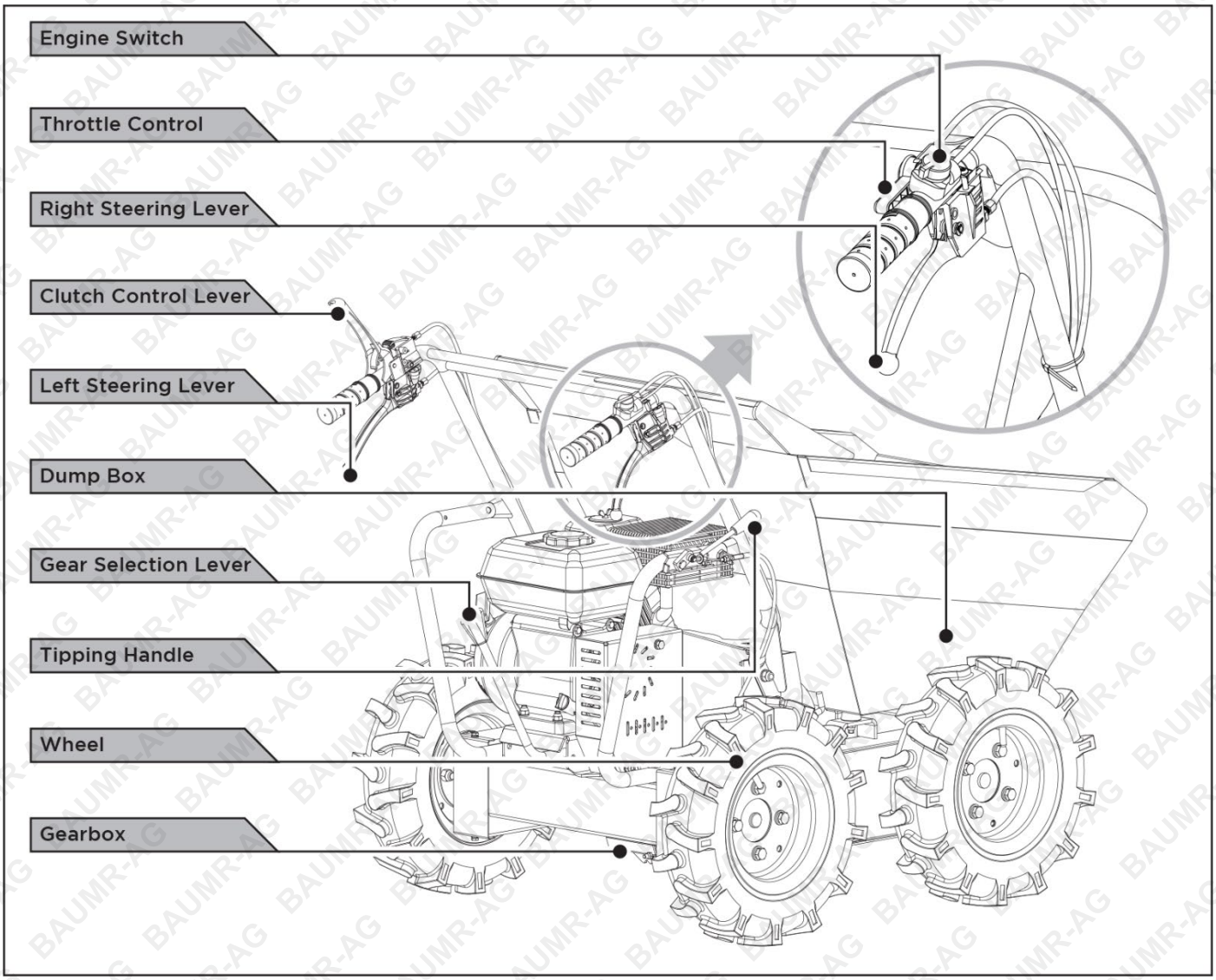

Engine Switch

- The engine switch enables and disables the ignition system.
- The engine switch must be in the ON position for the engine to run.
- Turning the engine switch to the OFF position stops the engine.

Clutch control lever

- Squeeze the control lever, clutch engaged.
- Release the lever, clutch disengaged.

Throttle control

- It controls engine speed. Put the throttle control on low speed (L) or high speed (H) or an intermediary position between L and H to increase or decrease the speed of engine.

Left steering lever

- Operate the lever to turn left.

Right steering lever

- Operate the lever to turn right.

Gear selection lever

- It controls forward or reverse movements of the machine.

© Baumr-AG

Tipping handle

It controls tipping of the dump box. Swing tipping handle A in the direction of the arrow to release limiter B out of hook C. The dump box will be released.

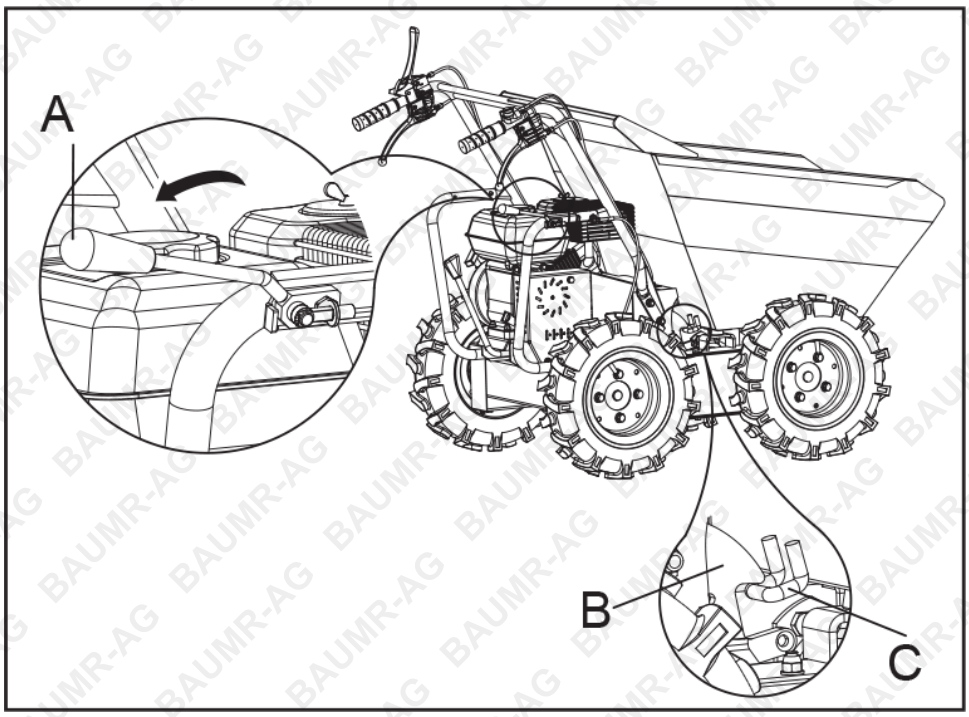

After tipping the load, swing handle A back to reset limiter B into hook C, which will lock the dump box.

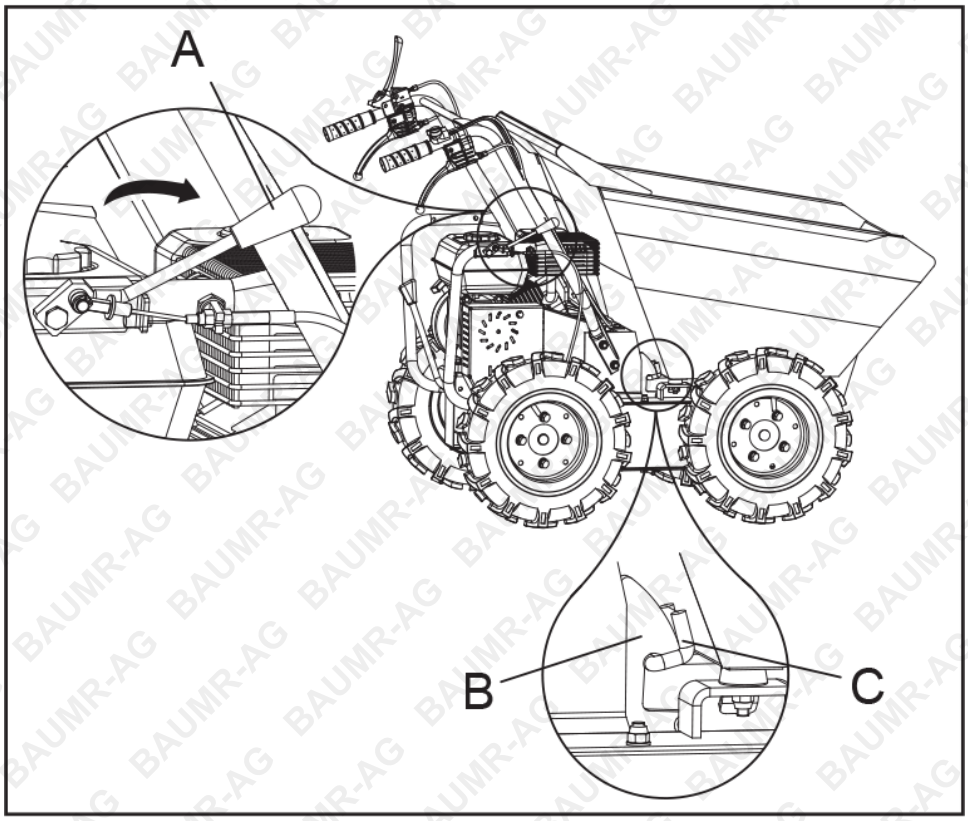

© Baumr-AG

Before you start to use the dumper, please check the dump box to make sure it is locked as shown in the diagram below.

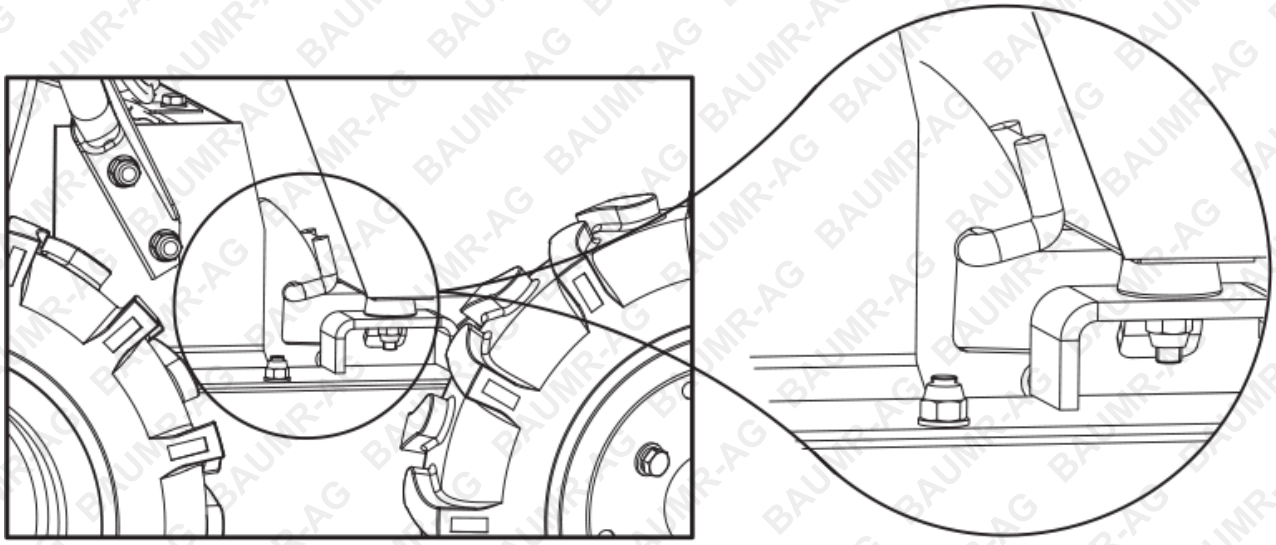

Operation

Adding Fuel

Fill the fuel tank as instructed in the separate Engine Manual packed with the machine.

Fill tank to no more than 12.5mm (1/2”) below the bottom of the filler neck to provide space for expansion.

Starting the Engine

A more detailed description of the engine operation and all related precautions and procedures can be found in the Engine Manual packed separately with the powered wheel barrow.

Video Tutorial:
Starting a 4-Stroke Engine

Follow the procedure below for cold starts:

1. Turn choke lever on the engine to full choke position.
2. Set the throttle lever on the handlebar at halfway position.
3. Turn the engine switch on.
4. Pull the starting rope slowly several times to allow the gasoline to flow into the engine’s carburettor. Then hold the start handle firmly and pull rope out a short distance until you feel some resistance. Then pull the rope smoothly and briskly and allow rope to return gently. Do not let the rope snap back. If necessary, pull the rope several times until the engine starts.
5. Allow the engine to run for several seconds to warm up. Then, gradually move chock lever to “OPEN” position.

Restarting an engine that is already warm from previous running does not normally require use of the choke.

1. Set the throttle lever on the handlebar at halfway position.
2. Hold the start handle firmly and pull rope out a short distance until you feel some resistance. Then pull the rope smoothly and briskly and allow rope to return gently. Do not let the rope snap back.

Operating the Wheel Barrow

- After engine warms up, pull throttle lever to accelerate engine speed.
- Engage the required gear and slowly squeeze the clutch control lever. If the gear does not engage straight away, slowly release the clutch lever and try again. In this way the powered wheel barrow will start moving.
- The powered wheel barrow has the steering levers on the handlebars, and this makes steering very easy. To turn right or left, simply operate the corresponding right or left steering lever.
- The sensitivity of the steering increases in proportion to the speed of the machine and that with the empty machine, a light pressure on the lever is all that is needed to turn. While when the machine is loaded, more pressure is required.
- The powered wheel barrow has a maximum capacity of 300kg. However, it is advisable to assess the load and adjust it according to the ground on which the machine will be used.
- It is therefore advisable to cover such stretches using low gear and taking extra care. In such situations, the machine should be kept in low gear for the whole stretch.
- Avoid sharp turns and frequent changes of direction while driving on the road, in particularly on rough, hard terrains full of sharp, uneven points with a high degree of friction.

- Remember to be careful when working in adverse weather conditions (ice, heavy rain and snow) or on types of ground that could make the powered wheel barrow unstable.
- When the clutch control lever is released, the machine will stop and brake automatically.
- If the machine is stopped on a steep slope, a wedge should be placed against one of the wheels.

Idle Speed

Set throttle control lever to its “SLOW” position to reduce stress on the engine when working is not being performed. Lowering the engine speed to idle the engine will help extend the life of the engine, as well as conserve fuel and reduce the noise level of the machine.

Stopping the Engine

To stop the engine in an emergency, simply turn the engine switch to the OFF position. Under normal conditions, use the following procedure.

1. Move the throttle lever to the SLOW position.
2. Let engine idle for one or two minutes.
3. Turn the engine switch to the OFF position.
4. Turn the fuel valve lever to the OFF position.



Do not move choke control to CHOKE to stop engine. Backfire or engine damage may occur.

Maintenance

A proper maintenance and lubrication will help the machine in a perfect working condition.

Preventive Maintenance

- Turn off engine and disengage all command levers. Engine must be cool.
- Inspect the general condition of the unit. Check for loose screws, misalignment or binding of moving parts, cracked or broken parts, and any other condition that may affect its safe operation.
- Remove all debris and other materials that may have accumulated to the track and unit. Clean after each use. Then use a premium quality lightweight machine oil to lubricate all moving parts.

Never use a “pressure washer” to clean your unit. Water can penetrate tight areas of the machine and its transmission case and cause damage to spindles, gears, bearings, or the engine. The use of pressure washers will result in shortened life and reduce serviceability.

Adjusting the Clutch

As the clutch wears out, the same lever could have a wider opening, being so uneasy to use. This means that it is necessary to adjust the cable, setting clutch lever on its original position acting on the adjustment device and on counter-nut.

Adjusting the Steering

If you have difficulty steering the unit, you will need to adjust the steering levers with the special adjusters. Slacken off the locknut and unscrew the adjusters to eliminate the play in the cable, which can occur after initial use or normal wear. Be very careful not to unscrew the adjusters too much because this can create another problem: the loss of traction. Remember to tighten the locknut when you have finished.

Lubrication

- The gearbox is pre-lubricated and sealed at the factory. No need to lubricate until 50 hours use.
- After first 50 hours use, change all the transmission oil. Capacity is 1.5L.
- For future use, just check the oil level every 50 hours of working. If remove the drain plug, no oil flow out, then add the oil.
- Gear oil SAE10W-30 is recommended. Do not use synthetic oil.
- Transmission oil must be replaced when engine is stopped and warm by unscrewing filler cap and drain plug. When oil is completely drained, replace filler cap, and fill up with fresh oil (See Figure 1).

© Baumr-AG

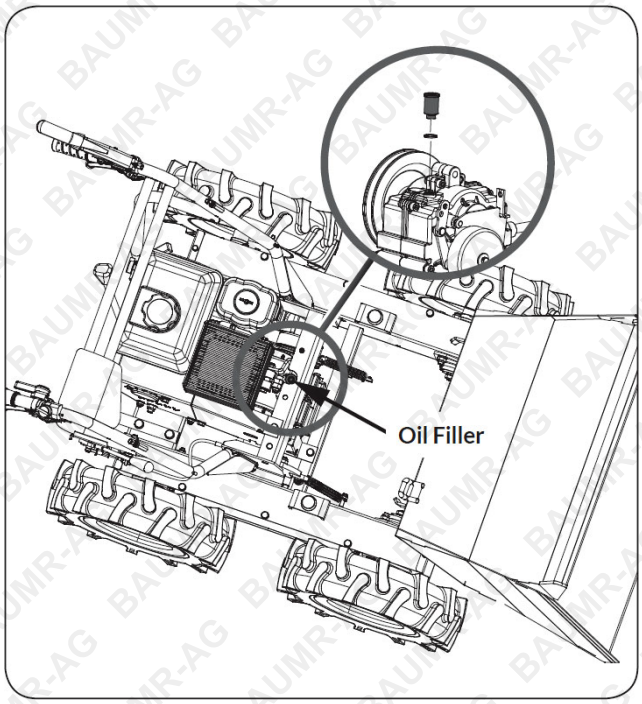

Figure 1

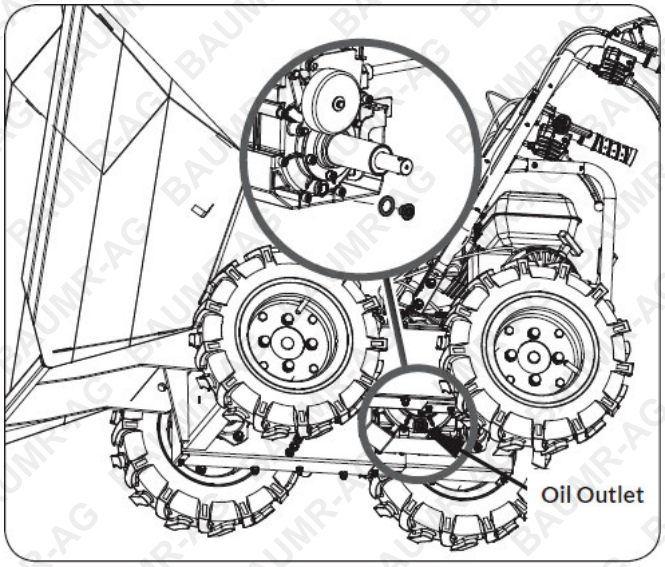

Figure 2

Tyre Pressure

Check the pressure of tyres periodically to make sure they are properly inflated. Recommended pressure is 30psi for all the tyres.

Separation of tyre and rim parts is possible when they are serviced incorrectly. 1.Do not attempt to mount a tyre without the proper equipment and experience to perform the job. 2. Do not inflate the tyres above the recommended pressure. 3. Do not weld or heat a wheel and tyre assembly. Welding can structurally weaken or deform the wheel. Heating can cause an increase in the air pressure resulting in burst. 4. Do not stand in front or over the tyre assembly while inflating.

Engine Maintenance

Refer to the Engine Manual included in your unit for the information on engine maintenance. Your engine manual provides detailed information and a maintenance schedule for performing the tasks.

Storage

If the powered wheel barrow will not be used for a period longer than 30 days, follow the steps below to prepare your unit for storage.

1. Drain the fuel tank completely. Stored fuel containing ethanol or MTBE can start to go stale in 30 days. Stale fuel has high gum content and can clog the carburettor and restrict fuel flow.
2. Start the engine and allow it to run until it stops. This ensures no fuel is left in the carburettor. Run the engine until it stops. This helps prevent gum deposits from forming inside the carburettor and possible engine damage.
3. While the engine is still warm, drain the oil from the engine. Refill with fresh oil of the grade recommended in the Engine Manual.
4. Use clean clothes to clean off the outside of the machine and to keep the air vents free of obstructions.

Do not use strong detergents or petroleum-based cleaners when cleaning plastic parts. Chemicals can damage plastics.

5. Inspect for any loose or damaged parts. Repair or replace damaged parts and tighten loose screws, nuts or bolts.
6. Store your unit on flat ground in a clean, dry building that has good ventilation.

Do not store the machine with fuel in a non-ventilated area where fuel fumes may reach flame, sparks, pilot lights or any ignition sources.

© Baumr-AG

Troubleshooting

Problem	Cause	Remedy
Engine fails to start.	1. Spark plug wire disconnected. 2. Out of fuel or stale fuel. 3. Choke not in open position. 4. Blocked fuel line. 5. Fouled spark plug. 6. Engine flooding.	1. Attach spark plug wire securely to spark plug. 2. Fill with clean, fresh gasoline. 3. Throttle must be positioned at choke for a cold start. 4. Clean the fuel line. 5. Clean, adjust gap, or replace. 6. Wait a few minutes to restart, but do not prime.
Engine runs erratically.	1. Spark plug wire loose. 2. Unit running on CHOKE. 3. Blocked fuel line or stale fuel. 4. Vent plugged. 5. Water or dirt in fuel system. 6. Dirty air cleaner. 7. Improper carburettor adjustment.	1. Connect and tighten spark plug wire. 2. Move choke lever to OFF. 3. Clean fuel line. Fill tank with clean, fresh gasoline. 4. Clear vent. 5. Drain fuel tank. Refill with fresh fuel. 6. Clean or replace air cleaner. 7. Refer to Engine Manual.
Engine overheats.	1. Engine oil level low. 2. Dirty air cleaner. 3. Air flow restricted. 4. Carburettor not adjusted properly.	1. Fill crankcase with proper oil. 2. Clean air cleaner. 3. Remove housing and clean. 4. Refer to Engine Manual.
Machine does not move while engine is running.	1. Gear is not properly selected. 2. Drive belt not tight enough.	1. Ensure gear lever is not in-between two different gears. 2. Tighten drive belt.

© Baumr-AG

Specifications

Model	BPR880
Engine	196cc, 6.5HP 4-Stroke
Emissions Compliance	Euro II
Transmission	3 forward gears + reverse
Load Capacity	300kg
Bucket Dimensions	94 x 64 x 33cm
Bucket Volume	125L
Track Width / Tyre Size	4x8 inches
Max Climb Angle (loaded to capacity)	20°
Motion	4 wheel drive / skid steering
Tyres	Pneumatic/agricultural tread
Forward Max Speed	6.4km/h
Reverse Max Speed	2.0km/h
Ground Clearance	100mm
Stair Climbing	Yes (30° with 100kg max load)

© Baumr-AG

Some experts believe that the incorrect or prolonged use of almost any product may cause serious injury or death. To help reduce your risk of serious injury or death, refer to the information below. For more information, see www.datastreamserver.com/safety

- Consult all documentation, packaging and product labelling before use. Note that some products feature documentation available online. It is recommended to print and retain the documentation.
- Before each use, check the product for loose/broken/damaged/missing parts, wear or leaks (if applicable). Never use a product with loose/broken/damaged/missing parts, wear or leaks.
- Products must be inspected and serviced (if applicable) by a qualified technician every 6 months. This is based on average residential use by persons of average size and strength, and on a property of average metropolitan size. Use beyond these recommendations may require more frequent inspections/servicing.
- Ensure that all users of the product have completed a suitable industry recognised training course before being allowed access to the product.
- The product has been supplied by a general merchandise retailer that may not be familiar with your specific application or description of application. Be sure to attain third-party approval from a qualified specialist for your application before use, regardless of any assurances from the retailer or its representatives.
- This product is not intended for use where fail-safe operation is required. As with any product (for example, automobile, computer, toaster), there is the possibility of technical issues that may require the repair or replacement of parts, or the product itself. If the possibility of such failure and the associated time it may take to rectify could in any way inconvenience the user, business or employee, or financially affect the user, business or employee, then the product is not suitable for your requirements. This product is not intended for use where incorrect operation or a failure of any kind, including but not limited to, a condition requiring product return, replacement, parts replacement or service by a technician may cause financial loss, loss of employee time or an inconvenience requiring compensation.
- If this product has been purchased in error when considering the information presented here, contact the retailer directly for details of their returns policy, if required.

edisons.com.au

© Baumr-AG. All rights reserved. No part of this document, including descriptive content, concepts, ideas, diagrams or images may be reproduced or transmitted in any form or by any means, electronic or mechanical, including photocopying, scanning or recording, or any information storage and retrieval system, without express permission or consent from the publisher.